TELEDYNE
MICROWAVE SOLUTIONS
Everywhereyoulook™

PRELIMINARY

ARJ1049

20 TO 1000 MHz; 1.5 WATT GULLWING CASCADABLE AMPLIFIER

Typical Values	ARJ1049
High Output Power	+32.0 dBm
High Second Order I.P.	+74.0 dBm
Ridiculously High Second Order Harmonic I.P.	+80.0 dBm
High Third Order I.P.	+42.0 dBm
High Performance Thin Film	
10-Pin Gullwing Package	

SPECIFICATIONS*

Parameter	Typical	Guaranteed 0 to 50 °C	Guaranteed -55 to +85 °C
Frequency (Min.)	10-1000 MHz	20-1000 MHz	20-1000 MHz
Small Signal Gain (Min.)	11.0 dB	10.0 dB	9.5 dB
Gain Flatness (Max.)	±1.0 dB	±1.3 dB	±1.5 dB
Noise Figure (Max.) 200-1000 MHz	4.0 dB	5.0 dB	5.5 dB
SWR (Max.) Input/Output	1.8:1	2.0:1	2.1:1
Power Output (Min.) @ 1dB comp.	+32.0 dBm	+30.0 dBm	+29.5^ dBm
DC Current (Max.)	600 mA	615 mA	620 mA

* Measured in a 50-ohm system at +15 Vdc unless otherwise specified.
^ Indicates minimum temperature at -55 /+71°C.

INTERMODULATION PERFORMANCE

Typical @ 25 °C	ARJ1049
Second Order Harmonic Intercept Point	+80 dBm
Second Order Two Tone Intercept Point	+74 dBm
Third Order Two Tone Intercept Point	+42 dBm

ABSOLUTE MAXIMUM RATINGS

Storage Temperature	-62 to +125 °C
Maximum Case Temperature	+100 °C
Maximum DC Voltage	+20 Volts
Maximum Continuous RF Input Power	+25 dBm[1]
Maximum Short Term Input Power (1 Minute Max.)	+27 dBm
Maximum Peak Power (3 µsec Max.)	+27 dBm
Burn-in Temperature	+85 °C
Thermal Resistance[2] (θjc)	+7.2 °C/Watt
Junction Temperature Rise Above Case (Tjc)	+64.5 °C

[1] If no load on output; decrease inpu power (no damage) by 10 dBm.
[2] Thermal resistance is based on total power dissipation.

ARJ1049

10-pin Gullwing Package

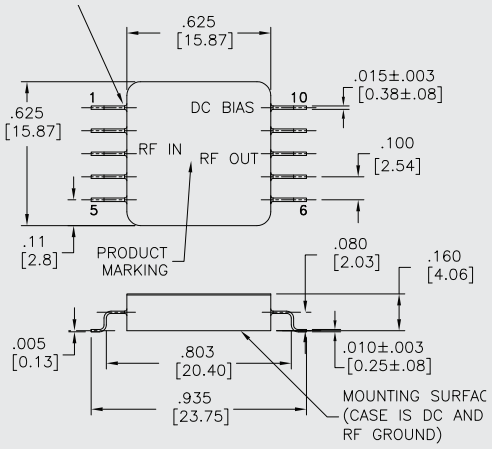

PIN 1,2,4,5,6,7, AND 9 HAVE NO CURRENT.

DIMENSIONS ARE IN INCHES [MILLIMETERS]