TELEDYNE
MICROWAVE SOLUTIONS
Everywhereyoulook™

Thin-Film Cascadable Amplifier 1700 to 2300 MHz

Technical Data

UTO/UTC 2311 Series

Features

- **Frequency Range: 1700 to 2300 MHz**
- **Noise Figure: 4.5 dB (Typ)**
- **Medium Gain: 10.0 dB (Typ)**
- **Temperature Compensated**

Applications

- **IF/RF Amplification**
- **Telemetry**
- **Military Communications**

Description

The 2311 Series is a low-power thin-film bipolar RF amplifier that incorporates resistive feedback and active bias for temperature compensation and increased immunity to bias voltage variations. Tuned inductive coupling maintains low VSWR over all conditions, while blocking capacitors couple RF through the amplifier. The 2311 Series amplifiers are available in either the TO-8 hermetic case or connectored TC-1A package.

Pin Configuration

UTO—TO-8U

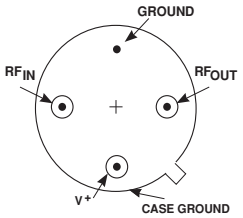

UTC—TC-1A

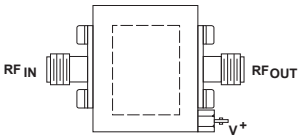

Schematic

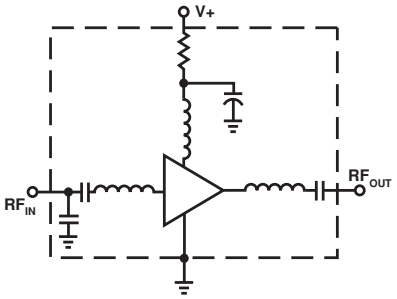

Maximum Ratings

Parameter	Maximum
DC Voltage	+17 Volts
Continuous RF Input Power	+13 dBm
Operating Case Temperature	–55 to +125°C
Storage Temperature	–62 to +150°C
"R" Series Burn-In Temperature	+125°C

Thermal Characteristics[1]

θ_{JC}	105°C/W
Active Transistor Power Dissipation	70 mW
Junction Temperature Above Case Temperature	7°C
MTBF (MIL-HDBK-217E, A_{UF} @ 90°C)	1,282,000 Hrs.

Weight: (typical) UTO—2.1 grams; UTC—21.5 grams

Electrical Specifications

(Measured in 50 Ω system @ +15 VDC nominal unless otherwise noted)

Symbol	Characteristic	Typical T_C = 25°C	Guaranteed Specifications T_C = 0 to 50°C	Guaranteed Specifications T_C = –55 to +85°C	Unit
BW	Frequency Range	1700-2300	1700-2300	1700-2300	MHz
GP	Small Signal Gain (Min.)	10.0	8.0	8.0	dB
—	Gain Flatness (Max.)	±0.2	±0.5	±1.0	dB
NF	Noise Figure (Max.)	4.5	5.0	5.5	dB
P_{1dB}	Power Output @ +1 dB Comp. (Min.)	+1.0	–3.0	–4.0	dBm
—	Input VSWR (Max.)	<1.5:1	2.0:1	2.0:1	—
—	Output VSWR (Max.)	<1.5:1	2.0:1	2.0:1	—
IP_3	Two Tone 3rd Order Intercept Point	+10.0	—	—	dBm
I_D	DC Current	15	—	—	mA

Typical Performance Over Temperature (@ +15 VDC unless otherwise noted)

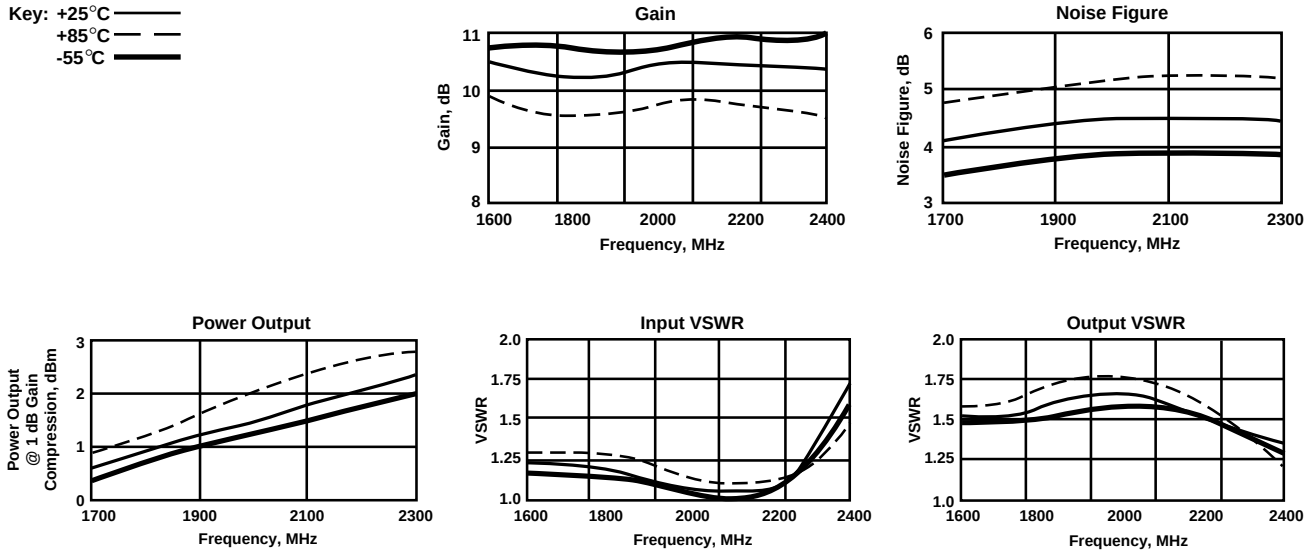

Automatic Network Analyzer Measurements (Typical production unit @ +25°C ambient)

Numerical Readings **Bias = 15.00 Volts**

FREQUENCY MHz	VSWR IN	GAIN dB	PHASE DEGREES	PHASE DEV	GROUP DELAY ns	VSWR OUT	ISOLATION dB
400.0	5.41	8.91	–151.85	—	.95	2.21	27.73
500.0	3.09	10.67	177.69	—	.76	2.07	25.25
600.0	2.32	11.19	153.51	—	.59	1.99	24.19
700.0	2.00	11.33	134.79	—	.46	1.94	23.54
800.0	1.05	11.23	119.30	—	.41	1.92	22.98
900.0	1.79	11.05	105.11	—	.38	1.90	22.42
1000.0	1.76	10.89	81.93	—	.35	1.88	21.99
1100.0	1.75	10.76	79.72	—	.33	1.85	21.62
1200.0	1.75	10.65	67.57	—	.34	1.81	20.92
1300.0	1.74	10.58	55.63	—	.33	1.74	20.32
1400.0	1.72	10.54	43.73	—	.33	1.68	19.92
1500.0	1.69	10.58	31.97	—	.33	1.61	19.47
1600.0	1.63	10.63	20.30	—	.33	1.51	19.16
1700.0	1.56	10.70	8.49	–1.24	.33	1.41	18.67
1800.0	1.47	10.73	–3.60	.14	.35	1.30	18.27
1900.0	1.39	10.78	–16.61	.60	.37	1.18	17.85
2000.0	1.28	10.88	–30.42	.26	.38	1.06	17.58
2100.0	1.22	10.95	–43.74	.41	.37	1.09	17.29
2200.0	1.26	10.90	–57.49	.15	.39	1.25	17.18
2300.0	1.40	10.72	–72.30	–1.17	.42	1.48	17.37
2400.0	1.63	10.27	–88.13	—	.38	1.75	18.00
2500.0	1.92	10.01	–101.60	—	.46	1.93	17.86

Linearization Range: 1700 to 2300 MHz

S-Parameters **Bias = 15.00 Volts**

FREQUENCY	S_{11}		S_{21}		S_{12}		S_{22}	
MHz	Mag	Ang	dB	Ang	dB	Ang	Mag	Ang
100.00	.818	–54.5	6.990	–153.5	–34.123	46.2	.604	–62.1
200.00	.931	–101.5	–2.432	140.8	–41.928	–12.8	.415	–78.3
300.00	.870	–147.9	3.407	–118.4	–35.814	113.4	.398	–101.3
400.00	.682	176.9	9.329	–157.3	–28.334	80.6	.380	–131.7
500.00	.522	155.8	10.785	174.5	–26.158	59.2	.359	–158.7
600.00	.418	142.8	11.314	150.4	–24.844	45.4	.339	177.2
700.00	.350	135.4	11.461	132.2	–23.862	35.4	.331	156.7
800.00	.311	132.8	11.381	118.1	–23.278	28.9	.328	141.9
900.00	.285	129.7	11.239	103.5	–22.606	21.7	.322	127.3
1000.00	.271	127.4	11.073	89.5	–21.803	13.5	.311	113.9
1100.00	.263	123.7	10.969	76.7	–21.405	5.6	.301	101.8
1200.00	.259	120.6	10.845	65.8	–20.783	1.1	.285	92.0
1300.00	.252	115.8	10.754	52.3	–20.251	–7.2	.263	79.9
1400.00	.241	108.9	10.696	39.0	–19.793	–15.2	.236	67.4
1500.00	.228	102.8	10.670	27.0	–19.158	–22.0	.207	55.0
1600.00	.212	95.4	10.689	16.0	–18.838	–29.3	.174	41.8
1700.00	.190	86.7	10.684	5.0	–18.341	–36.1	.142	26.5
1800.00	.158	73.7	10.664	–9.5	–17.978	–46.4	.100	.4
1900.00	.119	59.5	10.599	–21.6	–17.490	–54.6	.071	–33.3
2000.00	.082	40.1	10.643	–31.5	–17.207	–60.5	.070	–77.9
2100.00	.052	–15.7	10.626	–45.8	–16.854	–71.1	.090	–124.5
2200.00	.085	–79.3	10.563	–60.2	–16.890	–82.4	.126	–156.3
2300.00	.146	–107.6	10.369	–73.3	–16.807	–92.5	.169	–179.6
2400.00	.218	–123.1	10.135	–88.3	–16.906	–102.6	.209	160.5
2500.00	.298	–136.1	9.861	–100.4	–17.251	–114.6	.247	139.7
2700.00	.491	–164.7	8.887	–136.1	–18.667	–145.3	.325	91.6
2900.00	.886	170.3	7.252	–171.8	–21.845	–174.8	.380	43.9
3000.00	.795	153.7	5.277	162.5	–26.883	159.8	.397	7.1

Product Options

UTO – 509R

Model Number Prefix
UTO-
UTM-
PPA-

Screening Option
Blank = No Screening
R = R-Series Screening

Model Number

UTC – 509-1

Model Number Prefix
UTC-

Connector Option
For TC-1 case the only connector option available is the -1. The -1 option consists of a SMA Female connector on both the input and output (see note).

Model Number

Note: R-Series screening is not available in the TC-1 case as the case is non-hermetic.

Case Drawings
TO-8U

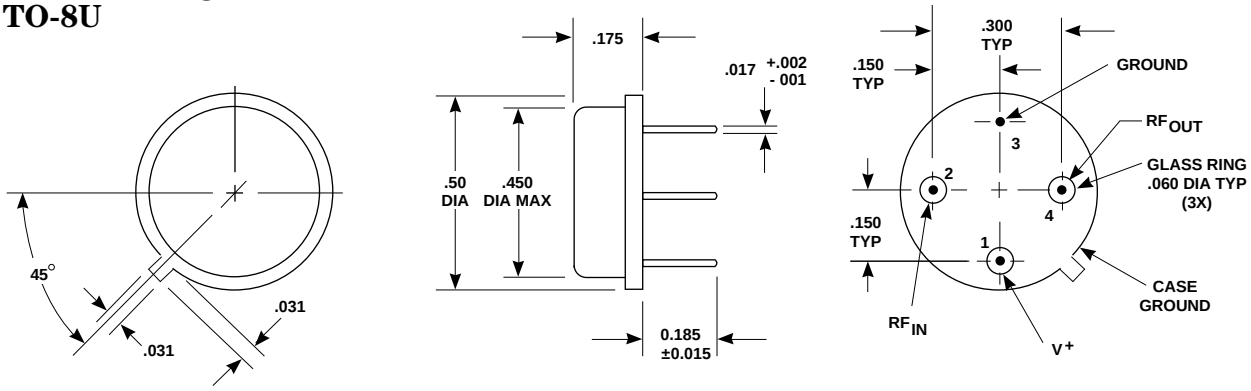

APPROXIMATE WEIGHT 2.1 GRAMS

NOTES (UNLESS OTHERWISE SPECIFIED):
1. DIMENSIONS ARE SPECIFIED IN INCHES
2. TOLERANCES: xx ± .02
xxx ± .010

Case Drawings
TC-1

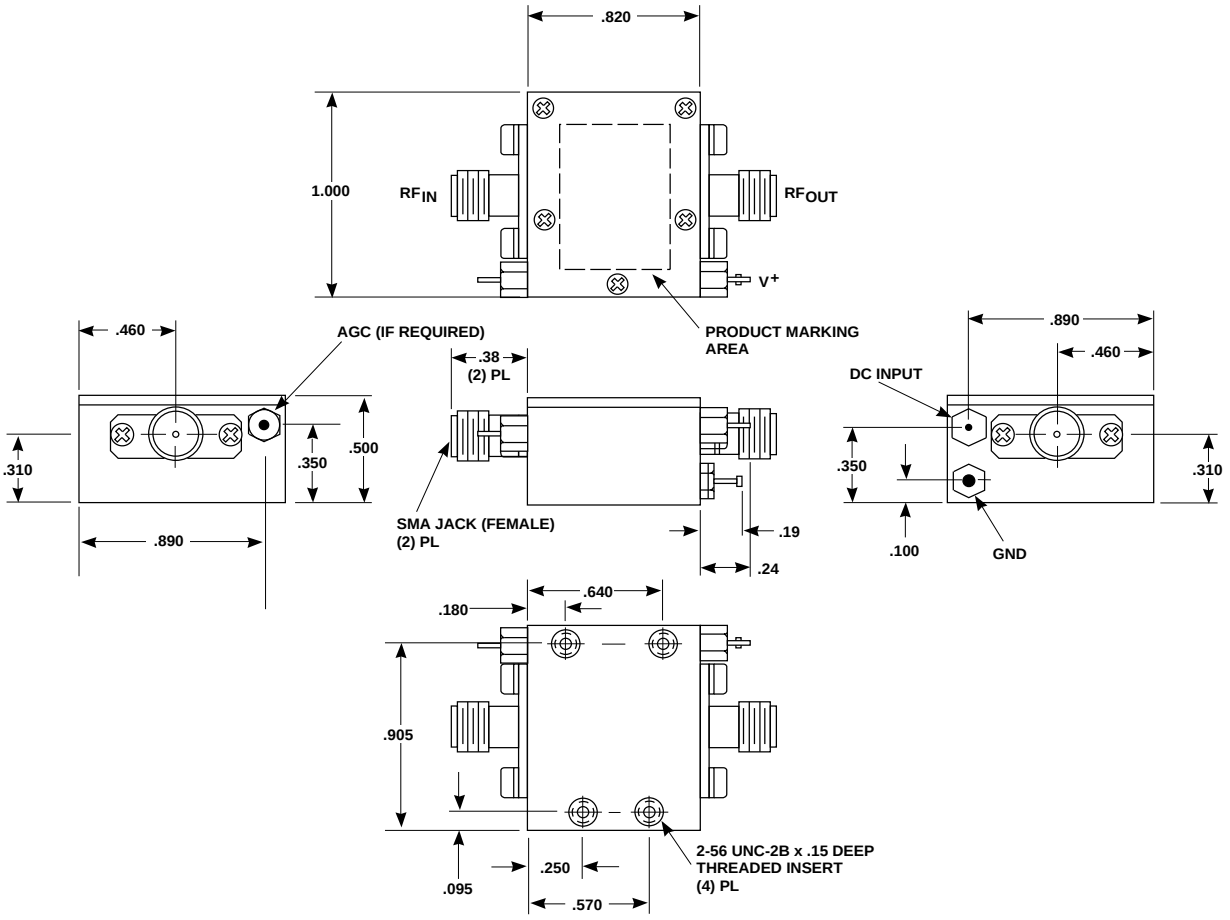

TYPICAL WEIGHT WITH CONNECTORS = 21.5 GRAMS

NOTES: 1. THE TC-1 CASE IS A NON-HERMETIC CASE.
2. THE ONLY CONNECTOR OPTION AVAILABLE FOR THE TC-1 CASE IS THE –1, SMA FEMALE CONNECTORS AT BOTH INPUT AND OUTPUT PORTS.

NOTES (UNLESS OTHERWISE SPECIFIED):
1. DIMENSIONS ARE SPECIFIED IN INCHES
2. TOLERANCES: xx ±.02
xxx ±.010

Contact Teledyne Microwave Solutions:
650-691-9800
650-962-6845 fax

Check for updates:
www.teledynemicrowave.com